BECS 22451

Experiment No: 09

# INTRODUCTION TO MATLAB SIMULINK


Student Name : W. U. S. Perera

Student Number : EC/2021/073


Date Performed : 02/12/2024

Date of Submission : 07/12/2024

Date : 02/12/2024

Experiment No : 09

Experiment Name : Introduction To MATLAB Simulink

## APPARATUS

- A PC or Laptop with MATLAB Simulink installed.

# THEORY AND DIAGRAMS

Simulink is a graphical programming environment in MATLAB that extends the capabilities of MATLAB for modeling, simulating, and analyzing multi-domain dynamical systems. It is widely used in various engineering disciplines for its intuitive and visual approach to system design.

- Simulink is an extension to MATLAB.
- In Simulink, users construct block diagram models for dynamic systems, departing from traditional text-based coding.
- Simulink excels in modeling complex nonlinear systems with ease.
- It has the capability to model both continuous and discrete-time components, enhancing versatility in system representation and analysis.

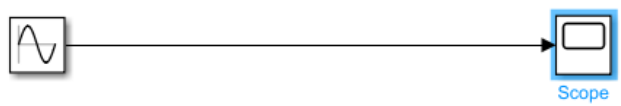


Figure 1

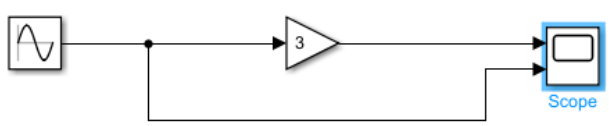


Figure 2

# THEORY AND DIAGRAMS

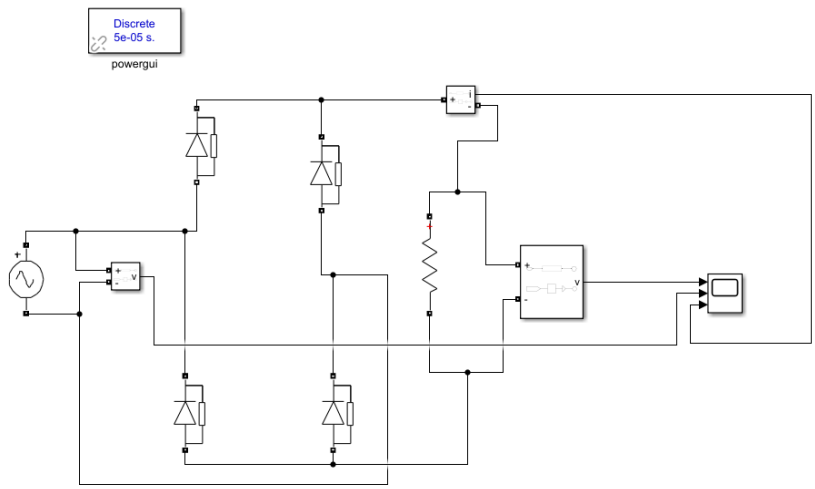


Figure 3

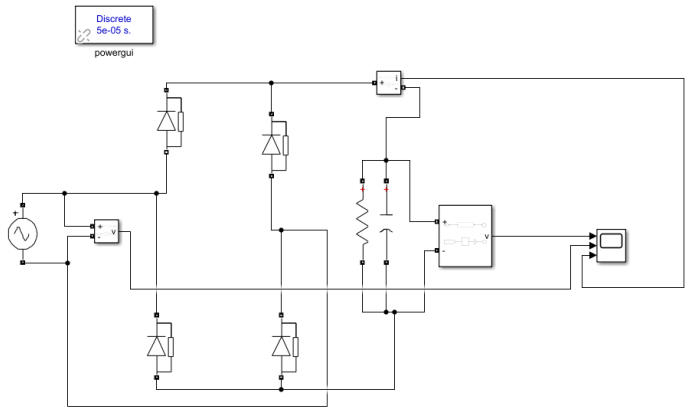


Figure 4

# PROCEDURE

## Part 01

1. MATLAB was started, and Simulink was started by clicking on the “Start Simulink” button. (There was an alternative method, which was to run the command “simulink” in the command window to start Simulink.)

2. In the simulation start window, “Blank Model” was clicked, which created a blank Simulink model.

3. The Simulink project was saved as “part_01_A.slx” in a folder created with the name “EC_2021_073.” A Word file was also created and renamed with the student number and saved in the same folder.

4. The “Library Browser” button was clicked to open the Simulink Library Browser, which contained all the Simulink components for models. Then, in the left panel, “Sources” was selected to open up the Simulink Source Models, and “Sine Wave” was selected. The model was dragged and dropped onto the canvas. For the amplitude, “1” was inserted. The default value for the amplitude was set to 1, and it could be changed by double-clicking the model.

5. Components were added by double-clicking the canvas as well. By double-clicking the canvas, “scope” was input to add an output visualizer to view the signal generated by the source. The “number of ports” was entered as 1 and could be changed later from the menu.

6. The source and scope were connected by clicking on the terminal ends.

7. The simulation was run by keeping everything default by clicking the “play” button in the top options bar. Then, the scope was double-clicked to view the output waveform.

8. The cursor measurement was clicked, and the horizontal cursors were used to note the value of peak-to-peak amplitude, while the vertical cursors were used to note the periodic time of the waveform.

# PROCEDURE

## Part 01

9. A screenshot of the circuit diagram and waveform was taken and inserted into the created Word file under Part 01-A. The Word file was updated with the amplitude and frequency of the waveform that were measured.

10. A “gain” block was inserted between the source and scope, and the gain was changed to “3.”

11. The “number of ports” of the scope was changed by double-clicking the scope and selecting File >> Number of Input Ports >> 2. The second input of the scope was used to observe the input waveform by directly connecting it to the source, as shown in Figure 2.

12. The simulation was run, and the output waveform was observed. Cursor measurements were used to measure the parameters of both waveforms, as done in step (8).

13. The results were recorded in the Word file under Part 01-B, as done in step (9).

## Part 02

1. A new project in Simulink was created (File >> New >> Blank Model), and the circuit is shown in Figure 3.

   a. Blocks for the circuit were inserted from Simscape >> Specialized Power Systems >> Fundamental Blocks in the left side panel. “AC Voltage source” in Electrical Sources was used as the power source for the system. The VRMS value was set to 230V. Diodes were inserted from “Power Electronics,” and the tick for “Show measurement port” was removed to eliminate additional ports if needed. Current and voltage sources were added from “Measurements,” and a scope was inserted to observe the three outputs.

   b. The procedure was followed to construct the circuit shown in Figure 3.

   c. “Powergui” was inserted, and the Simulation type was set to “Discrete.”

# PROCEDURE

**Part 02**

d. The simulation was run with a 0.05 s simulation stop time, and the three outputs were observed. The content was saved under Part 02-A.

e. A capacitor with 100 µF was inserted parallel to the load resistor, and the change in waveforms was observed. The step (d) was repeated, and the content was saved under Part 02-B.

f. The capacitance was changed to 1000 µF, and the change in waveforms was observed. The step (d) was repeated, and the content was saved under Part 02-C.

# OBSERVATIONS

## Part _01_A

Peek-to-peek amplitude

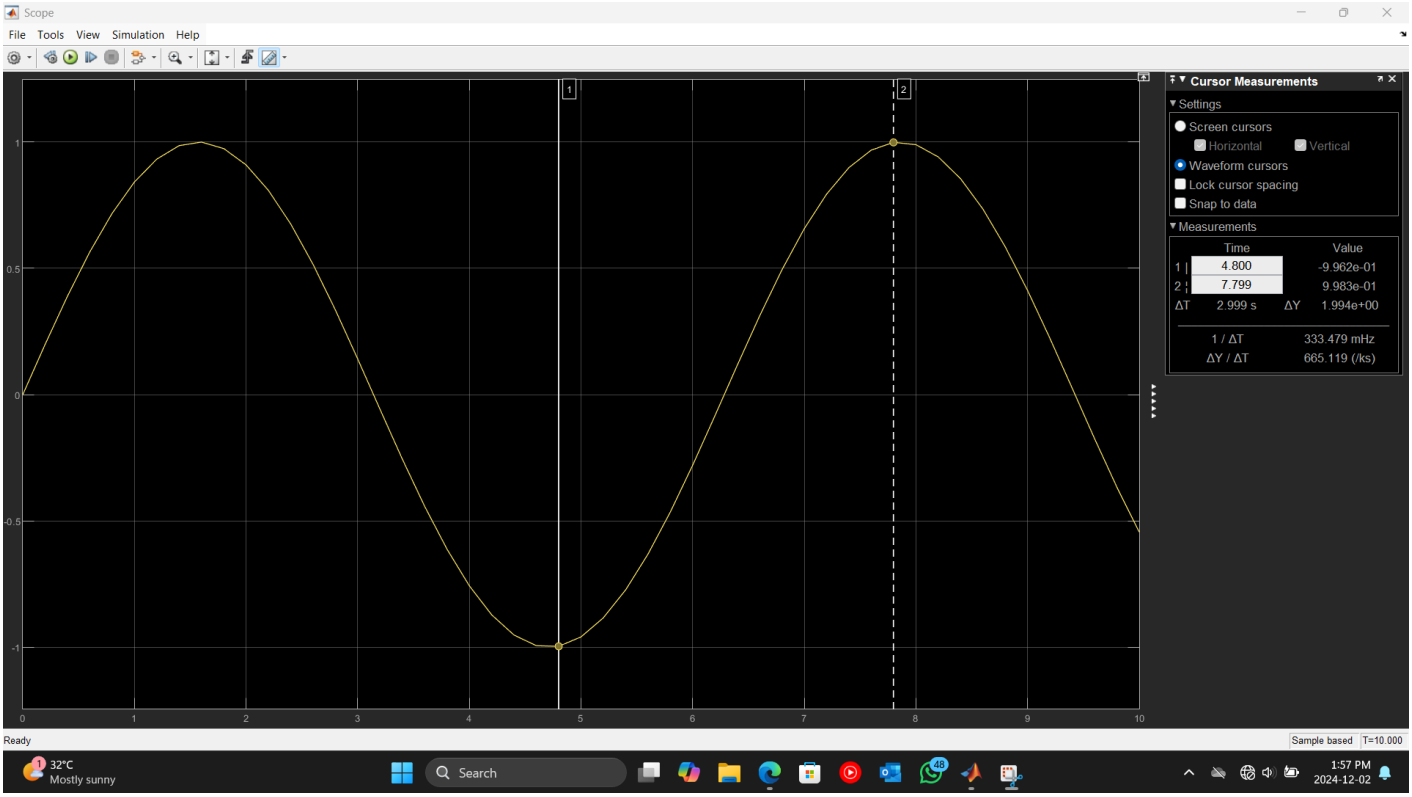


Periodic time

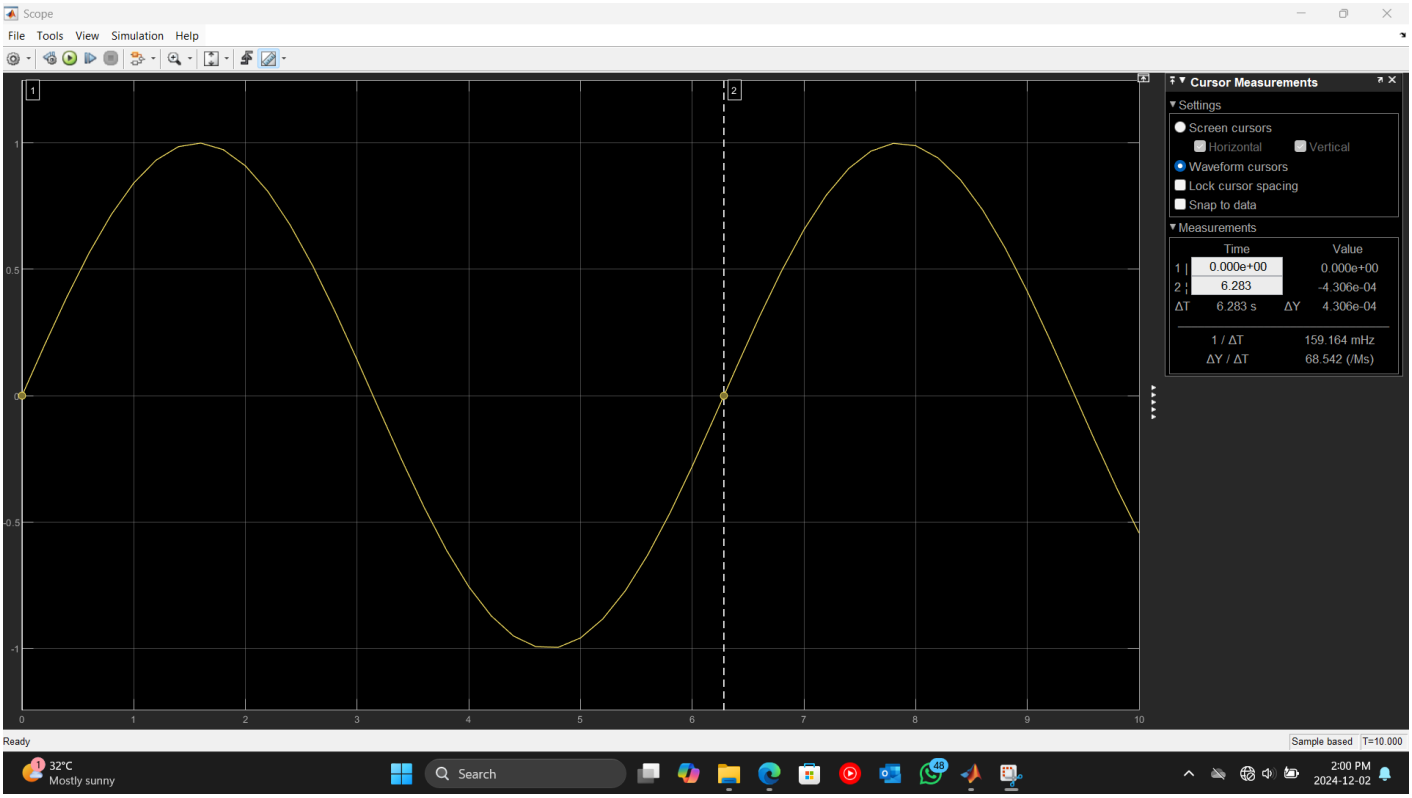

# OBSERVATIONS

## Part _01_B

Peek-to-peek amplitude

Periodic time

# OBSERVATIONS

## Part _02_A

Amplitude

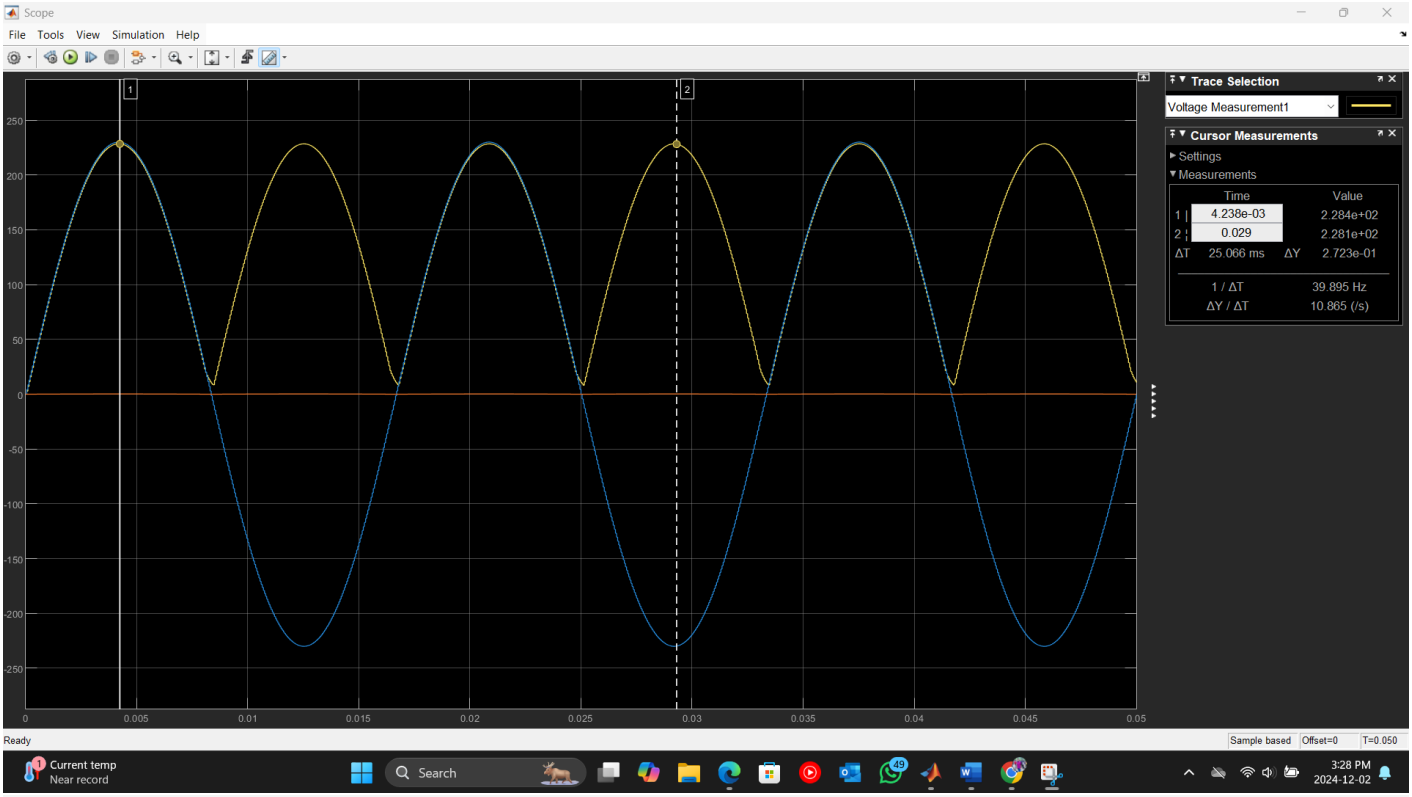


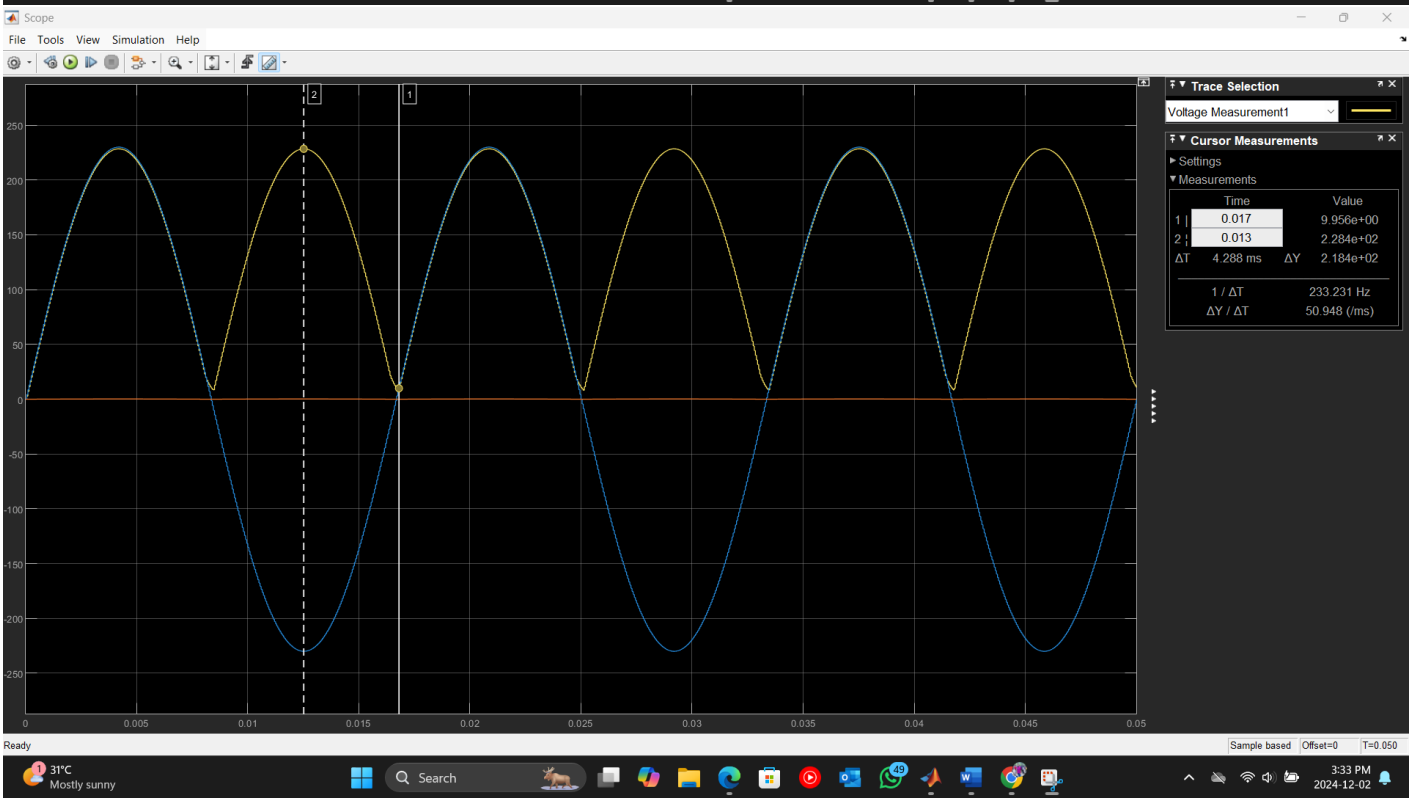

# OBSERVATIONS

Periodic time

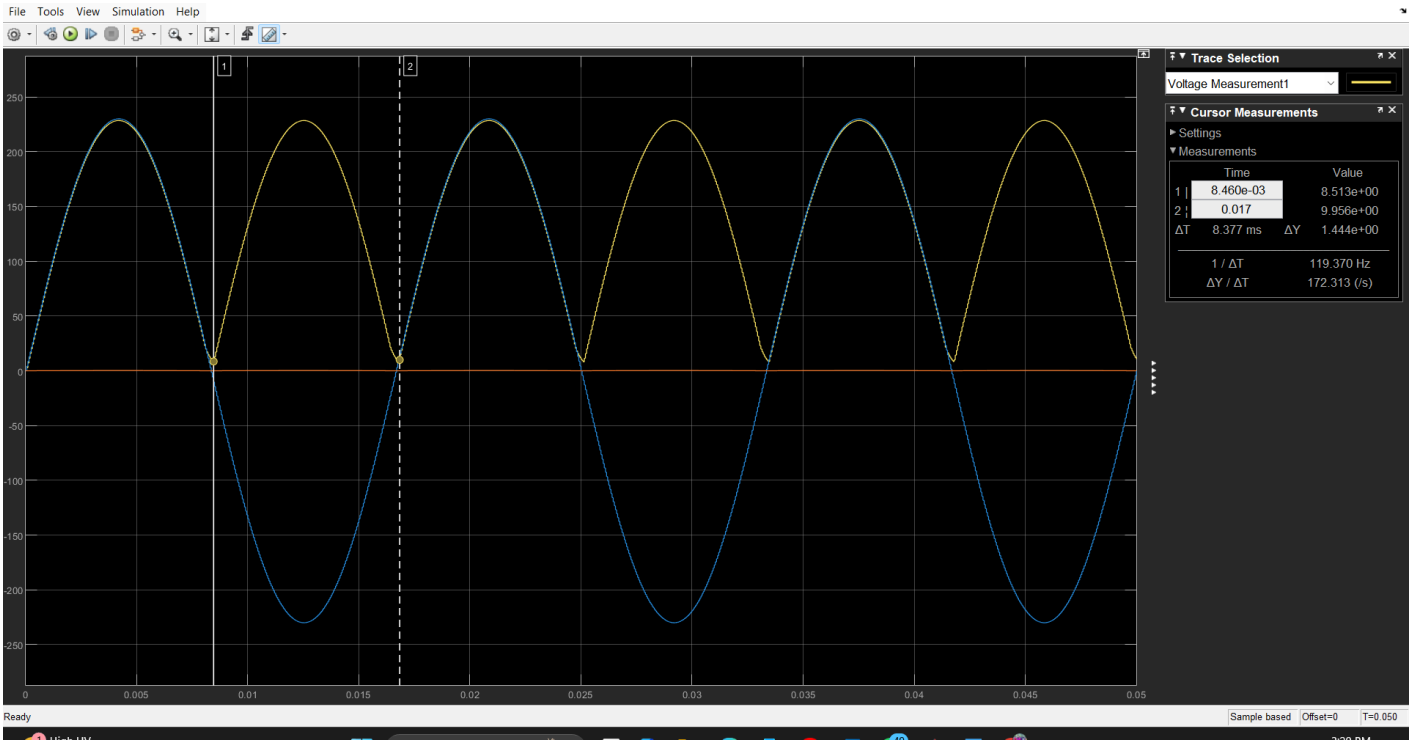


**Part _02_B**

(With 100 X 10^-6 F capacitor)

Amplitude

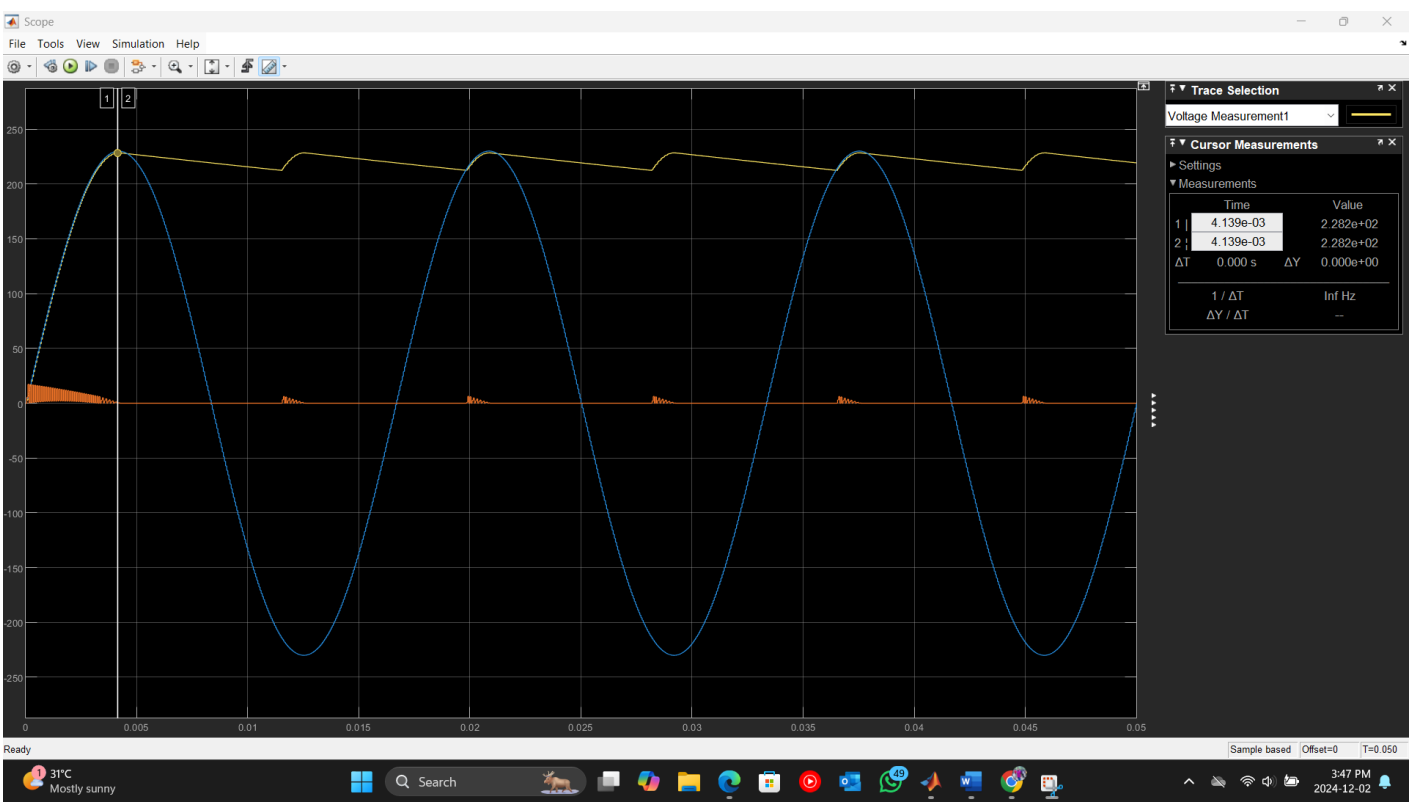

# OBSERVATIONS

Periodic time

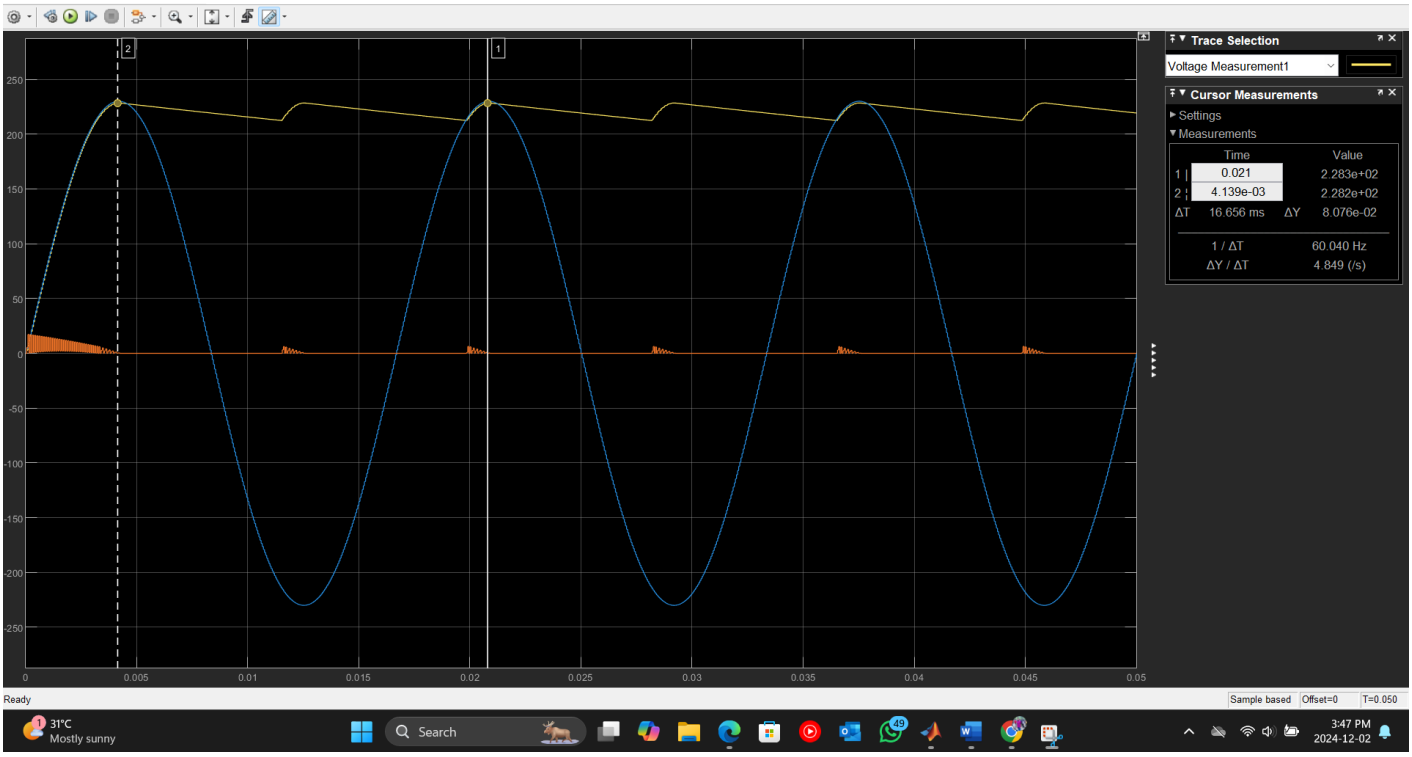


## Part _02_C

(With 1000 X 10^-6 F capacitor)

Amplitude

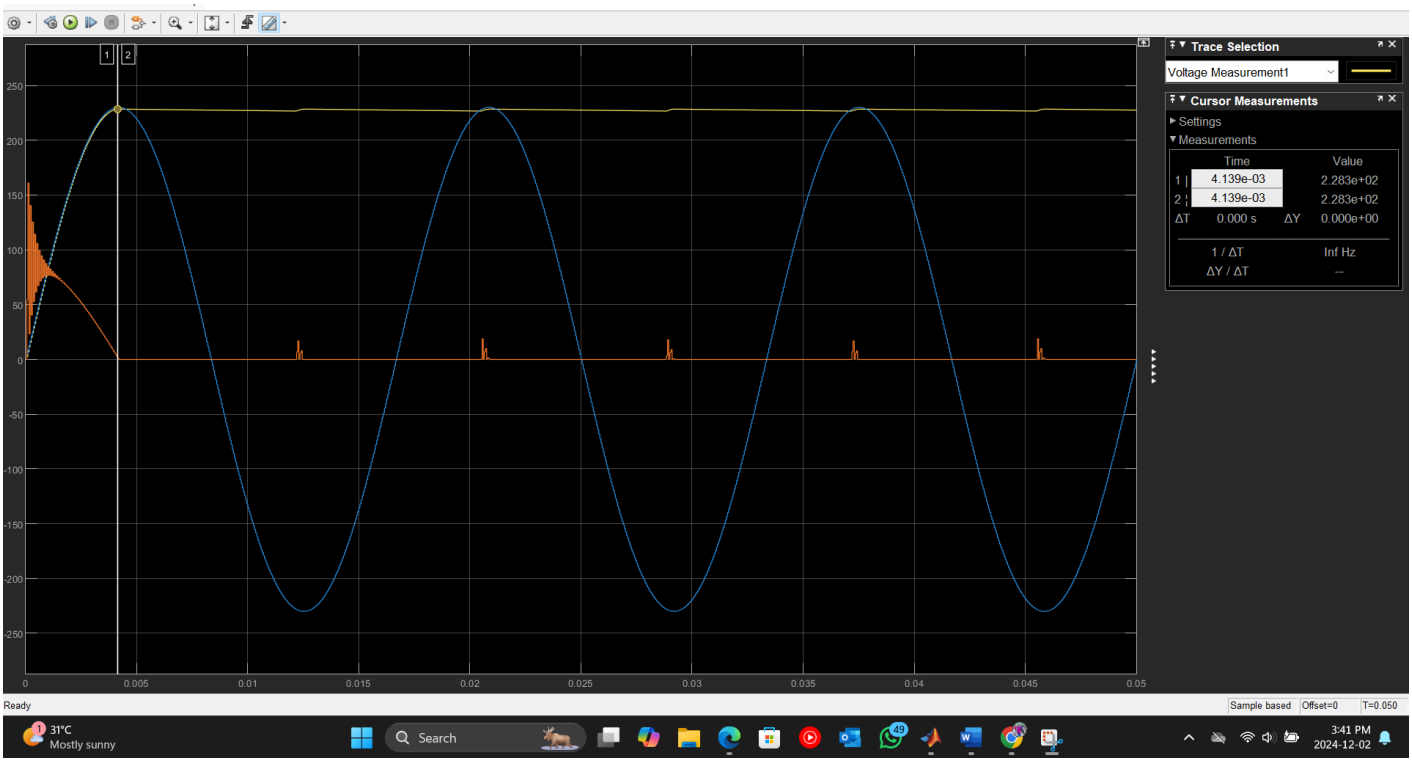

# OBSERVATIONS

## Periodic time

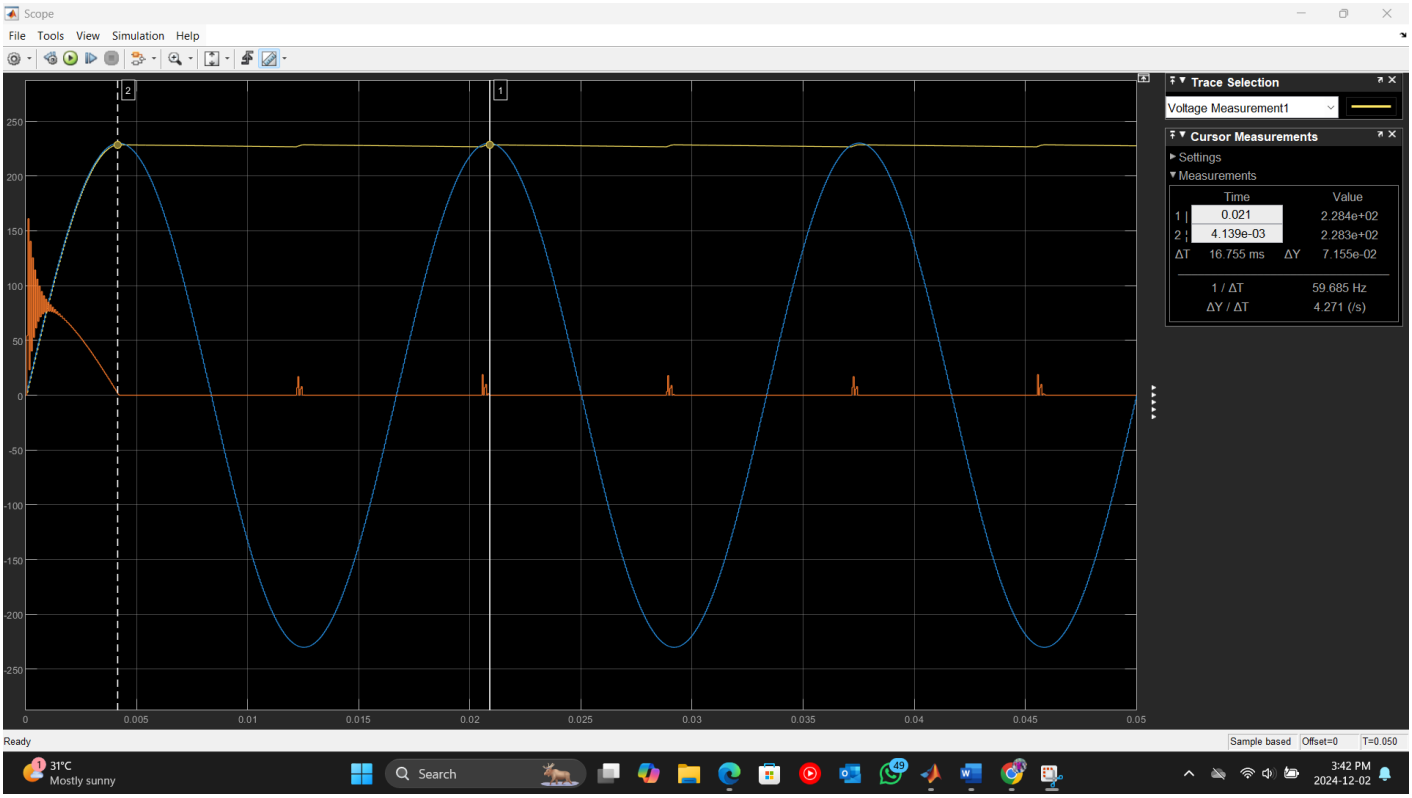

# CONCLUSION

The experiment was on how MATLAB Simulink can model and simulate systems by the use of block diagrams. Though it was somehow difficult to find appropriate tools in the beginning and make out the results, with practice, it became easier. Simulink works great in collaboration with MATLAB for developing and testing even complex systems. Though it requires a good computer and time for learning, the application is very useful as it simplifies the system design and aids in solving real-life problems.

# DISCUSSION

MATLAB Simulink is a powerful tool for modeling, simulation, and analysis of multi-domain dynamic systems. It extends the computational capability of MATLAB through a graphical programming environment whereby one can design systems by drawing block diagrams instead of writing code. That makes Simulink very user-friendly, especially for engineers and researchers involved in studying complex system dynamics. In this experiment, some basic operations are acquired in Simulink, such as how to connect blocks, how to modify the parameter, and how to read the output of a simulation.

The first big problem that occurred during the practical was dealing with Simulink and finding the necessary blocks in such an extensive library. Yes, it offered a lot of ready-made components through the "Library Browser"; still, it was not easy initially to search and find which components will suit better. A helpful strategy that seemed to help get blocks such as "Sine Wave" and "Scope" more quickly was using the search feature inside the browser.

Challenges arose in the making appropriate component connections. Mismatched connections brought about inappropriate simulation with wrong output. Such was solved by checking terminal connections and ensuring that the simulation diagram conformed to the diagram before pressing the run icon. Additionally, it was rather hard to interpret the results obtained from the simulation especially the measurements from the waveform. These were achieved by using measurement cursors and cross-checking against instructions for accurate reading of amplitude and time period, respectively.

Simulink has a host of advantages in system design. It is generally user-friendly and makes designing, even for very complex systems, quite easy because it is graphically represented. The tool also allows both continuous and discrete time simulations of systems to be performed on it. Simulink can also work hand in hand with MATLAB for the analysis of data from the simulation and performing mathematical functions on it. Also, this was further facilitated by the countless number of pre-made blocks that allow development to be ultra-quicker compared to making an implementation of our own by coding each and every element. Finally, nonlinear or multi-domain system capability makes the software highly useful in present engineering.

Limitation to Simulink Of course, Simulink doesn't avoid their unfavorable part. To illustrate, big-size and high-fidelity simulations require huge computations by computers. Small computers will not be good for such purposes. Another drawback is that it has quite a steep learning curve for freshers. Learning how many blocks and tools do what requires time. For very low budgets, individual users, and small organizations without institutional backup, licenses to operate MATLAB and Simulink are very expensive.

# DISCUSSION

The experiment was a great introduction to MATLAB Simulink and its importance in the modeling and simulation of a system. The block diagram approach was effective and intuitive while designing and analyzing the system. At the beginning, problems in understanding the library and result interpretation needed more effort in managing; however, these problems served to indicate the route for practice. Simulink encompasses a wide area of features and applications in a cross-discipline way; therefore, this makes it a very useful tool among engineers and researchers. Its potential capability to merge theory with practice makes it extremely relevant to state-of-the-art engineering and system design.

# QUESTIONS AND ANSWERS

1. Explain the concept of block diagram modeling in Simulink. How does it help in system design and analysis?

Answer-

Simulink block diagram modeling is a way of visually representing systems using interconnected blocks where each block represents some component or function of the system. This approach in system design and analysis is of special use since it overpoweringly shows the interaction between the parts. For instance, the practical "Sine Wave" and "Scope" blocks will allow one to create, in a very simple form, a model with which he will simulate and test signal behavior. Dynamic changes of the parameters and observation of their effect in real time give place to fast prototyping and optimization. The methodology connects the theoretical concept with practical implementation; hence, it is more comprehensible and testable regarding system behavior.

2. In what engineering disciplines is Simulink commonly used, and what advantages does it offer in those applications?

Answer-

Simulink can be applied to almost all fields because of its flexibility and accuracy. In electrical engineering, its application can be seen in the design of circuits, power systems, and control systems. In mechanical, Simulink is used to model a dynamic system such as vibration and thermal analyses. It is of great importance in the aerospace industry, where it deals with flight dynamics, the development of control systems, and real-time simulations. Simulink finds wide applications in industries and educational institutions while carrying out the design and testing of controllers, say PID or state-space controllers. Being a multi-domain system simulator, Simulink finds wide applicability in interdisciplinary projects like robotics, where mechanical, electrical, and control systems interact.

*******